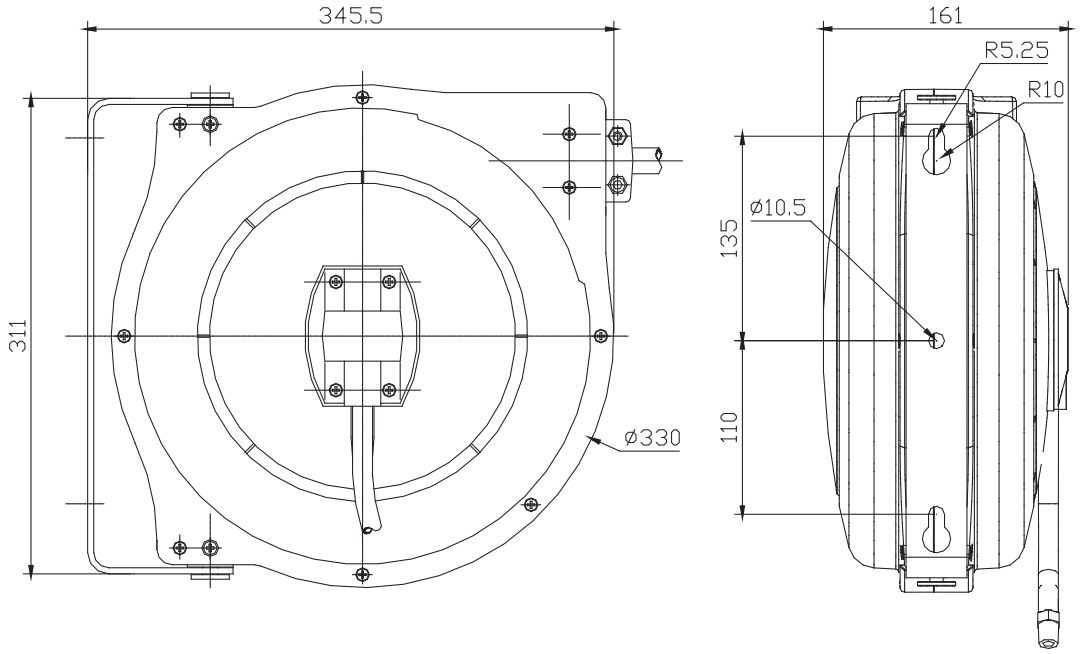
345.5
311
ø330
161
R5.25
R10
ø10.5
135
110